| 版次 (Vension) | 变更内容 (Rev. Content) | 变更者 (Change Person) |
|---|---|---|
| | | |
| | | |

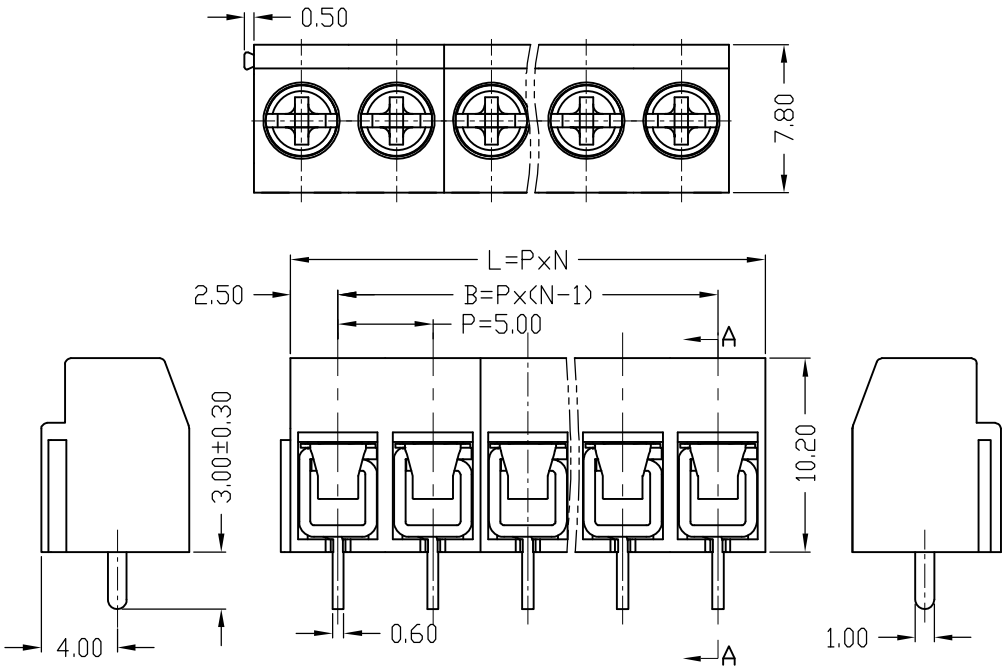


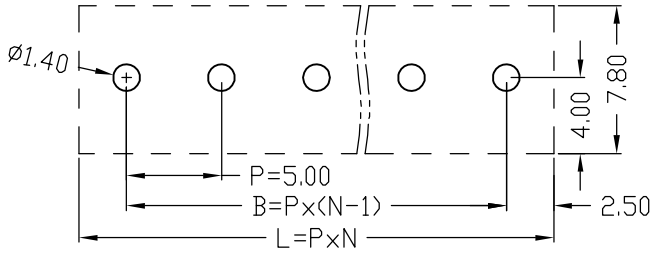


PCB LAYOUT

| 技术参数 (Technical Data) | | |
|---|---|---|
| 项 目(Item) | UL | IEC |
| 额定电气参数 (Rated Electrical Parameters) | 300V/10A | 250V/18A |
| 压线范围 (Wire Range) | 26～14AWG | 2.5mm² |
| 工频耐压 (Frequency Voltage) | AC 2500V | |
| 冲击耐压 (Rated Surge Voltage) | 4000V | |
| 绝缘阻抗 (Insulation Resistance) | DC500V 500MΩ above | |
| 接触电阻 (Contact Resistance) | ≤8mΩ | |
| 剥线长度 (Strpping Length) | 6～7mm | |
| 工作温度 (Temperature) | -40℃～+105℃ | |
| 材质和电镀(Material and plating) | | |
| 绝缘材质(Housing) | PA66(UL94 V-0) | |
| 触点材料(Contact) | 铜合金，镀锡(Copper alloy, Sn plated) | |
| 螺丝(Screws) | 钢,镀锌(Steel, Zn plated) | |
| 弹片(Spring) | 不锈钢(Stainless) | |

产品命名编码:
(Product Number Code):

GS006S-5.0-XXP-1Y-61A(H)

- 产品型号(Series No.)
- 极数(No.of poles)
- 客户需求 (Customer Request)
- 塑体颜色(Housing Color)

1:单倍间距 (Single Pitch)
2:双倍间距 (Double Pitch)

1:绿色(Green)
2:蓝色(Blue)
3:黑色(Black)
4:灰色(Grey)
5:橙色(Orange)
6:红色(Red)
7:透明色 (Transparent)
8:白色(White)
9:黄色(Yellow)
Y:多种颜色 (Mixed Color)

P=5.00mm,N为孔位数(N for hole digits),有效位数为(Significant Digits): 02P,03P～XXP

| N | 02P | 03P | 04P | 05P | 06P | 07P | 08P | 09P | 10P | 11P | 12P | 13P |
|---|---|---|---|---|---|---|---|---|---|---|---|---|
| L | 10.00 | 15.00 | 20.00 | 25.00 | 30.00 | 35.00 | 40.00 | 45.00 | 50.00 | 55.00 | 60.00 | 65.00 |
| B | 5.00 | 10.00 | 15.00 | 20.00 | 25.00 | 30.00 | 35.00 | 40.00 | 45.00 | 50.00 | 55.00 | 60.00 |
| N | 14P | 15P | 16P | 17P | 18P | 19P | 20P | 21P | 22P | 23P | 24P | ··· |
| L | 70.00 | 75.00 | 80.00 | 85.00 | 90.00 | 95.00 | 100.00 | 105.00 | 110.00 | 115.00 | 120.00 | |
| B | 65.00 | 70.00 | 75.00 | 80.00 | 85.00 | 90.00 | 95.00 | 100.00 | 105.00 | 110.00 | 115.00 | |

# Ant Electronic CO.,LTD

型号(Type): GS006S-5.0-XXP-1Y-61A(H)

| | | |
|---|---|---|
| 核准(Approval): | 图号(Drawing NO.): | |
| 审核(Audit): | 单位(Units):mm | 页码(Page): 1/1 |
| 设计(Design): | 比例(Scale):FULL | |

| 公差范围(Tolerance Range) | | |
|---|---|---|
| 150～ | | ±1.50 |
| 60～150 | | ±1.00 |
| 30～60 | | ±0.60 |
| 6～30 | | ±0.40 |
| 0～6 | | ±0.25 |
| 角度 (Angle) | X | ±2° |
| | X.X | ±1° |

版次(Version): T0