| 版次 (Vension) | 变更内容 (Rev. Content) | 变更者 (Change Person) |
|---|---|---|
| | | |
| | | |

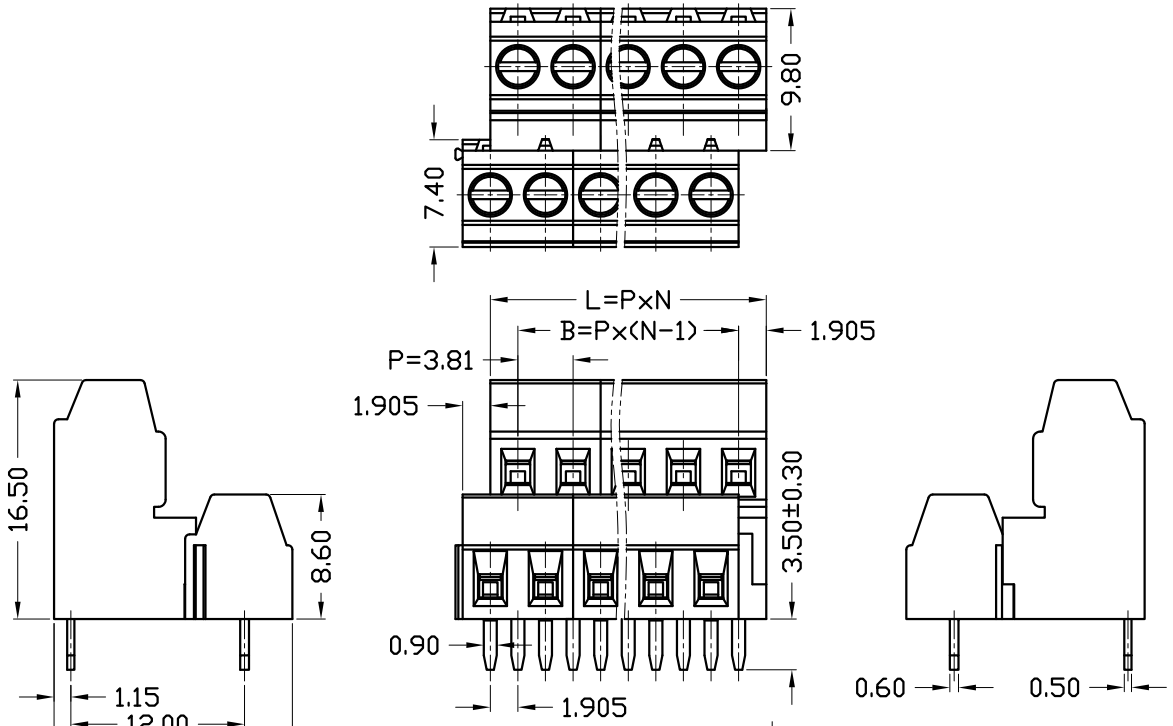


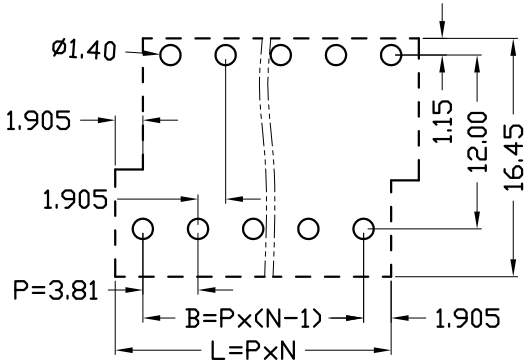


PCB LAYOUT

| 技术参数 (Technical Data) | | |
|---|---|---|
| 项 目(Item) | UL | IEC |
| 额定电气参数 (Rated Electrical Parameters) | 150V/10A | 130V/10A |
| 压线范围 (Wire Range) | 26～16AWG | 0.5～1.0mm² |
| 工频耐压 (Frequency Voltage) | AC 2000V | |
| 冲击耐压 (Rated Surge Voltage) | 2500V | |
| 绝缘阻抗 (Insulation Resistance) | DC500V 500MΩ above | |
| 接触电阻 (Contact Resistance) | ≤20mΩ | |
| 剥线长度 (Strpping Length) | 5mm | |
| 工作温度 (Temperature) | -40℃～+105℃ | |
| 材质和电镀(Material and plating) | | |
| 绝缘材质(Housing) | PA66(UL94 V-0) | |
| 触点材料(Contact) | 铜合金，镀锡(Copper alloy, Sn plated) | |
| 螺丝(Screws) | 钢，镀锌(Steel, Zn plated) | |
| 方盒(Cage) | 铜合金，镀镍(Copper alloy, Ni plated) | |

产品命名编码:
(Product Number Code):

GS034A-3.81-2*XXP-1Y-00A(H)

- 产品型号(Series No.)
- 极数(No. of poles)
- 客户需求 (Customer Request)
- 塑体颜色(Housing Color)

1:单倍间距 (Single Pitch)
2:双倍间距 (Double Pitch)

1:绿色(Green)
2:蓝色(Blue)
3:黑色(Black)
4:灰色(Grey)
5:橙色(Orange)
6:红色(Red)
7:透明色 (Transparent)
8:白色(White)
9:黄色(Yellow)
Y:多种颜色 (Mixed Color)

| P=3.81mm,N为孔位数(N for hole digits),有效位数为(Significant Digits): 02P～XXP | | | | | | | | | | | |
|---|---|---|---|---|---|---|---|---|---|---|---|
| N | 02P | 03P | 04P | 05P | 06P | 07P | 08P | 09P | 10P | 11P | 12P | 13P |
| L | 7.62 | 11.43 | 15.24 | 19.05 | 22.86 | 26.67 | 30.48 | 34.29 | 38.10 | 41.91 | 45.72 | 49.53 |
| B | 3.81 | 7.62 | 11.43 | 15.24 | 19.05 | 22.86 | 26.67 | 30.48 | 34.29 | 38.10 | 41.91 | 45.72 |
| N | 14P | 15P | 16P | 17P | 18P | 19P | 20P | 21P | 22P | 23P | 24P | ··· |
| L | 53.34 | 57.15 | 60.96 | 64.77 | 68.58 | 72.39 | 76.20 | 80.01 | 83.82 | 87.63 | 91.44 | |
| B | 49.53 | 53.34 | 57.15 | 60.96 | 64.77 | 68.58 | 72.39 | 76.20 | 80.01 | 83.82 | 87.63 | |

# Ant Electronic CO.,LTD

型号(Type): GS034A-3.81-2*XXP-1Y-00A(H)

| | | |
|---|---|---|
| 核准(Approval): | 图号(Drawing NO.): | |
| 审核(Audit): | 单位(Units):mm | 页码(Page): 1/1 |
| 设计(Design): | 比例(Scale):FULL | |

| 公差范围(Tolerance Range) | | |
|---|---|---|
| 150～ | | ±1.50 |
| 60～150 | | ±1.00 |
| 30～60 | | ±0.60 |
| 6～30 | | ±0.40 |
| 0～6 | | ±0.25 |
| 角度 (Angle) | X | ±2° |
| | X.X | ±1° |

版次(Version): T0