版次 (Vension)	变更内容 (Rev. Content)	变更者 (Change Person)

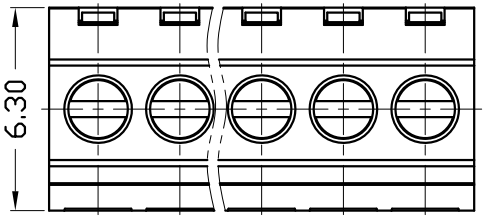

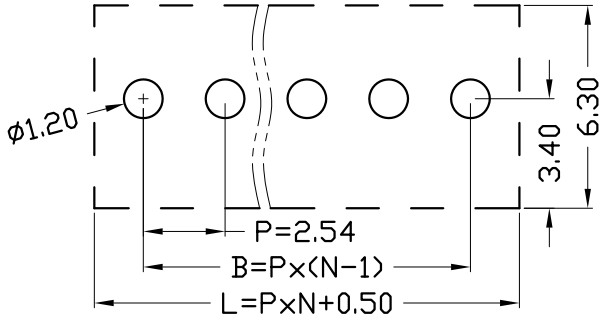

PCB LAYOUT

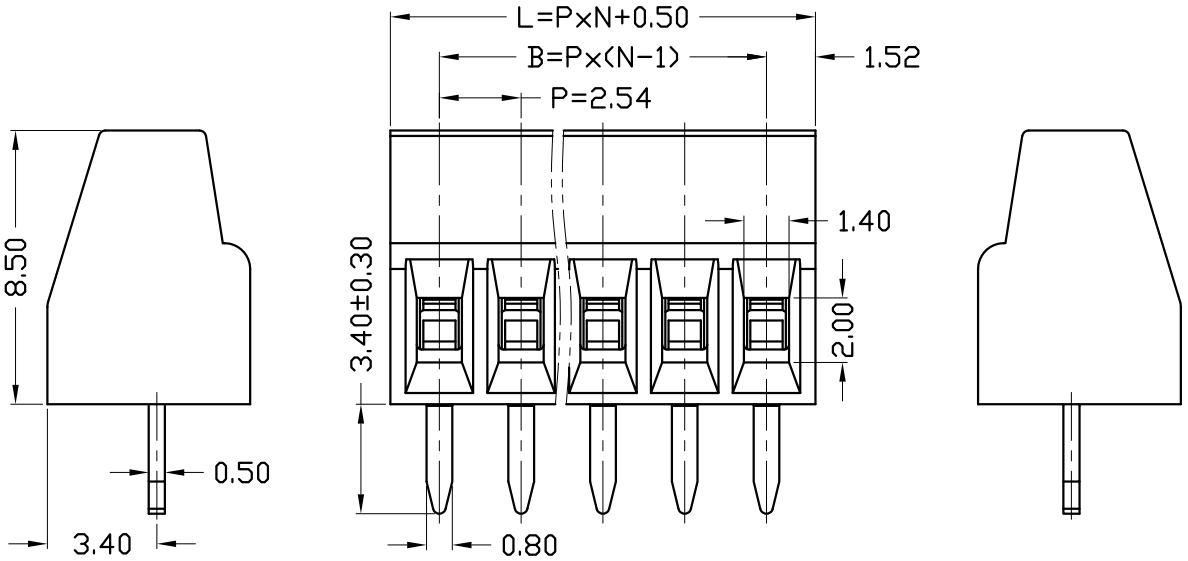

技术参数 (Technical Data)		
项　目(Item)	UL	IEC
额定电气参数 (Rated Electrical Parameters)	150V/6A	130V/08A
压线范围 (Wire Range)	26～18AWG	0.5～1.0mm²
工频耐压 (Frequency Voltage)	AC 1250V	
冲击耐压 (Rated Surge Voltage)	2500V	
绝缘阻抗 (Insulation Resistance)	DC500V 500MΩ above	
接触电阻 (Contact Resistance)	≤20mΩ	
剥线长度 (Strpping Length)	4.5mm	
工作温度 (Temperature)	-40℃～+105℃	
材质和电镀(Material and plating)		
绝缘材质(Housing)	PA66(UL94 V-0)	
触点材料(Contact)	铜合金，镀锡(Copper alloy, Sn plated)	
螺丝(Screws)	钢，镀锌(Steel, Zn plated)	
方盒(Cage)	铜合金，镀镍(Copper alloy, Ni plated)	

产品命名编码:
(Product Number Code):

GS019S-2.54-XXP-1Y-00A(H)

- 产品型号(Series No.)
- 极数(No.of poles)
- 客户需求 (Customer Request)
- 塑体颜色(Housing Color)

1:单倍间距 (Single Pitch)
2:双倍间距 (Double Pitch)

1:绿色(Green)
2:蓝色(Blue)
3:黑色(Black)
4:灰色(Grey)
5:橙色(Orange)
6:红色(Red)
7:透明色 (Transparent)
8:白色(White)
9:黄色(Yellow)
Y:多种颜色 (Mixed Color)

L为产品总长，P为PIN距，N为位数(有效位数为02P～30P)，P=2.54

N	02P	03P	04P	05P	06P	07P	08P	09P	10P	11P	12P	13P
L	5.58	8.12	10.66	13.20	15.74	18.28	20.82	23.36	25.90	28.44	30.98	33.52
B	2.54	5.08	7.62	10.16	12.70	15.24	17.78	20.32	22.86	25.40	27.94	30.48
N	14P	15P	16P	17P	18P	19P	20P	21P	22P	23P	24P	25P
L	36.06	38.60	41.14	43.68	46.22	48.76	51.30	53.84	56.38	58.92	61.46	64.00
B	33.02	35.56	38.10	40.64	43.18	45.72	48.26	50.80	53.34	55.88	58.42	60.96
N	26P	27P	28P	29P	30P							
L	66.54	69.08	71.62	74.16	76.70							
B	63.50	66.04	68.58	71.12	73.66							

Ant Electronic CO.,LTD

型号(Type): GS019S-2.54-XXP-1Y-00A(H)

核准(Approval):	图号(Drawing NO.):	
审核(Audit):	单位(Units):mm	页码(Page): 1/1
设计(Design):	比例(Scale):FULL	

公差范围(Tolerance Range)		
150～		±1.50
60～150		±1.00
30～60		±0.60
6～30		±0.40
0～6		±0.25
角度 (Angle)	X	±2°
	X.X	±1°

版次(Version): T0