版次 (Vension)	变更内容 (Rev. Content)	变更者 (Change Person)

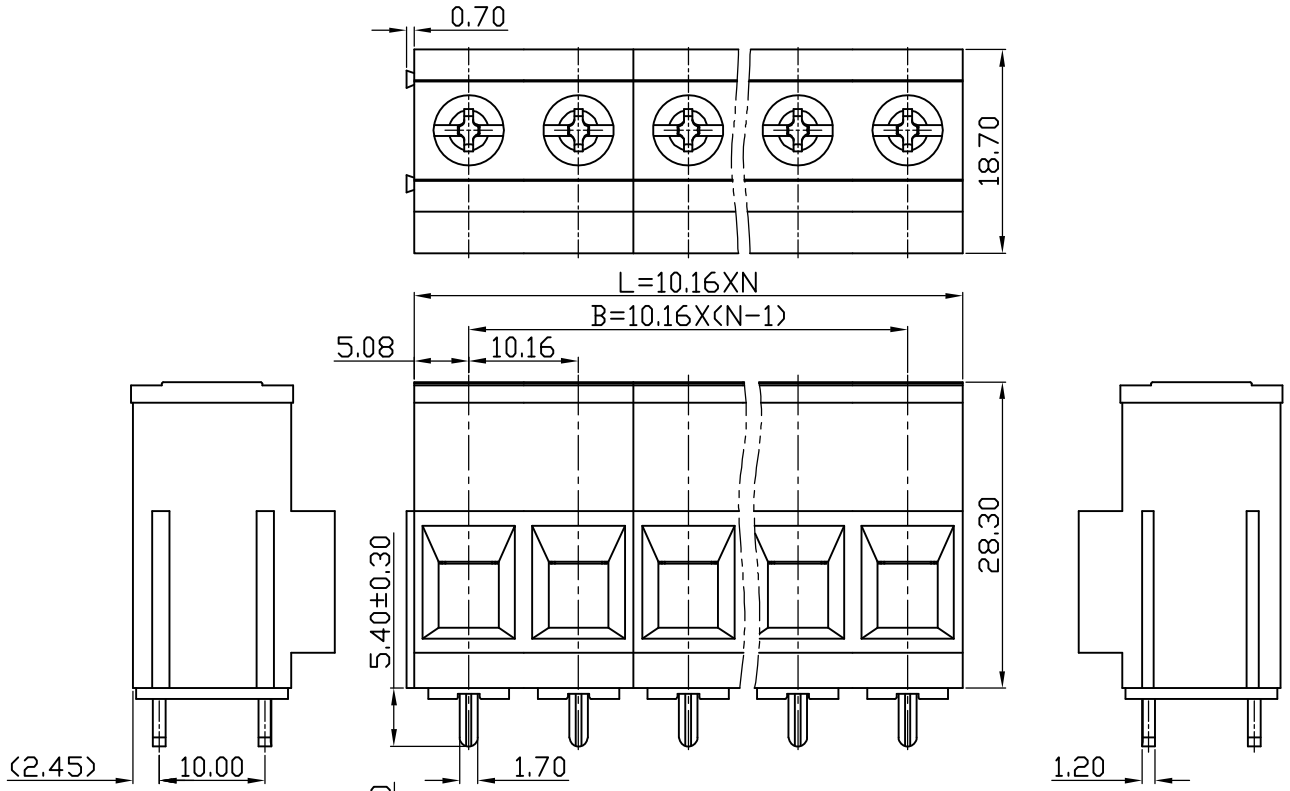

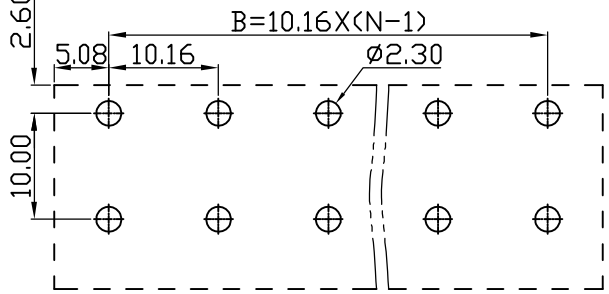

PCB LAYOUT

技术参数 (Technical Data)		
项 目(Item)	UL	IEC
额定电气参数 (Rated Electrical Parameters)	300V/52A	750V(III/2)/57A
压线范围 (Wire Range)	20～6AWG	10mm²
工频耐压 (Frequency Voltage)	AC 3000V	
冲击耐压 (Rated Surge Voltage)	6000V	
绝缘阻抗 (Insulation Resistance)	DC500V 500MΩ above	
接触电阻 (Contact Resistance)	≤20mΩ	
剥线长度 (Strpping Length)	10mm	
工作温度 (Temperature)	-40°C～+105°C	
材质和电镀(Material and plating)		
绝缘材质(Housing)	PA66(UL94 V-0)	
触点材料(Contact)	铜合金，镀锡(Copper alloy, Sn plated)	
螺丝(Screws)	钢,镀锌(Steel, Zn plated)	
方盒(Cage)	铜合金，镀镍(Copper alloy, Ni plated)	

产品命名编码:
(Product Number Code):

GS030B-10.16-XXP-1Y-01A(H)

- 产品型号(Series No.)
- 极数(No.of poles)
- 塑体颜色(Housing Color)
- 客户需求 (Customer Request)

1:单倍间距 (Single Pitch)
2:双倍间距 (Double Pitch)

1:绿色(Green)
2:蓝色(Blue)
3:黑色(Black)
4:灰色(Grey)
5:橙色(Orange)
6:红色(Red)
7:透明色 (Transparent)
8:白色(White)
9:黄色(Yellow)
Y:多种颜色 (Mixed Color)

P=10.16mm,N为孔位数(N for hole digits),有效位数为(Significant Digits): (02P～XXP)

N	02P	03P	04P	05P	06P	07P	08P	09P	10P	11P	12P	13P
L	20.32	30.48	40.64	50.80	60.96	71.12	81.28	91.44	101.60	111.76	121.92	132.08
B	10.16	20.32	30.48	40.64	50.80	60.96	71.12	81.28	91.44	101.60	111.76	121.92
N	14P	15P	16P	17P	18P	19P	20P	21P	22P	23P	24P	···
L	142.24	152.40	162.56	172.72	182.88	193.04	203.20	213.36	223.52	233.68	243.84	···
B	132.08	142.24	152.40	162.56	172.72	182.88	193.04	203.20	213.36	223.52	233.68	···

Ant Electronic CO.,LTD

型号(Type): GS030B-10.16-XXP-1Y-01A(H)

核准(Approval):	图号(Drawing NO.):	
审核(Audit):	单位(Units):mm	页码(Page): 1/1
设计(Design):	比例(Scale):FULL	

公差范围(Tolerance Range)		
150～		±1.50
60～150		±1.00
30～60		±0.80
6～30		±0.40
0～6		±0.25
角度 (Angle)	X	±2°
	X.X	±1°

版次(Version): T0