版次 (Vension)	变更内容 (Rev. Content)	变更者 (Change Person)

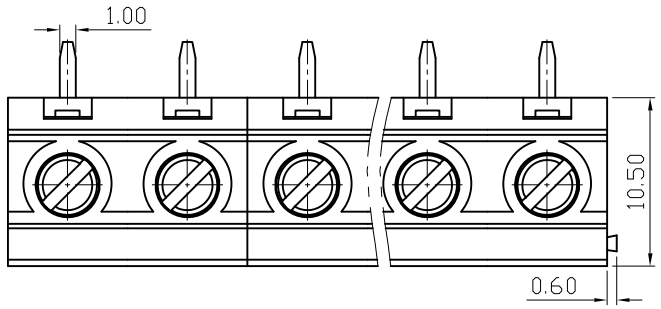

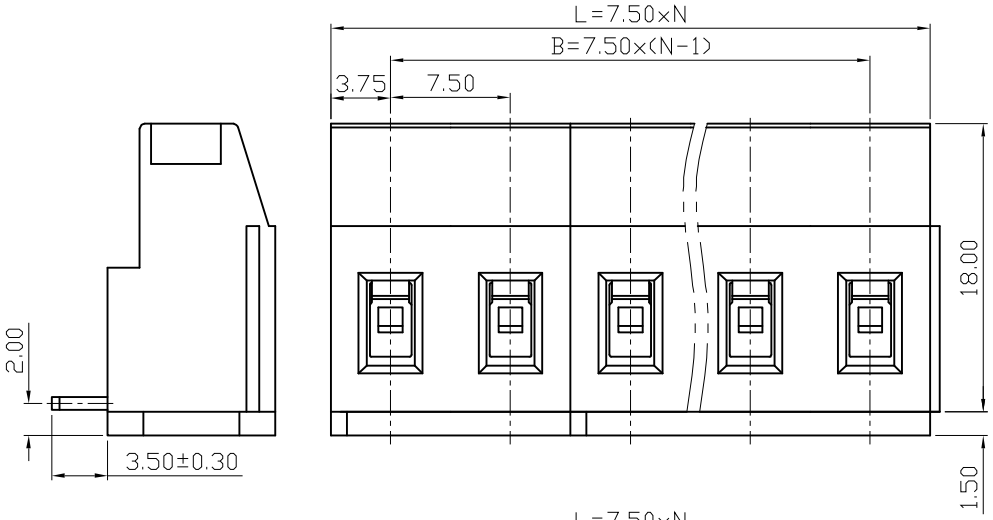

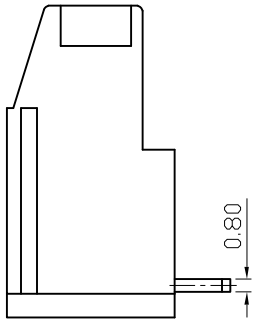

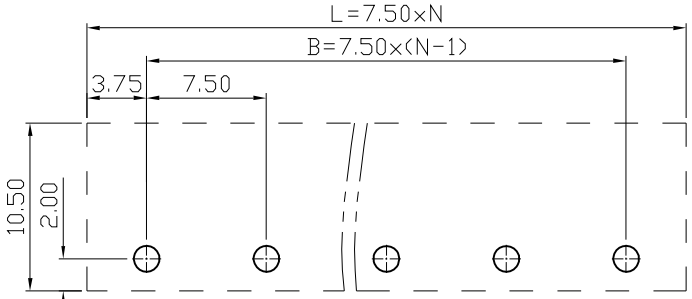

PCB LAYOUT

技术参数 (Technical Data)		
项 目(Item)	UL	IEC
额定电气参数 (Rated Electrical Parameters)	300V/20A	450V/20A
压线范围 (Wire Range)	26～12AWG	0.5～2.5mm²
工频耐压 (Frequency Voltage)	AC 2500V	
冲击耐压 (Rated Surge Voltage)	4000V	
绝缘阻抗 (Insulation Resistance)	DC500V 500MΩ above	
接触电阻 (Contact Resistance)	≤8mΩ	
剥线长度 (Strpping Length)	7mm	
工作温度 (Temperature)	-40℃～+105℃	
材质和电镀(Material and plating)		
绝缘材质(Housing)	PA66(UL94 V-0)	
触点材料(Contact)	铜合金，镀锡(Copper alloy, Sn plated)	
螺丝(Screws)	钢，镀锌(Steel, Zn plated)	
方盒(Cage)	铜合金，镀镍(Copper alloy, Ni plated)	

产品命名编码:
(Product Number Code):

GS017R-7.5-XXP-1Y-00A(H)

- 产品型号(Series No.)
- 极数(No.of poles)
- 1:单倍间距 (Single Pitch)
  2:双倍间距 (Double Pitch)
- 塑体颜色(Housing Color)
  1:绿色(Green)
  2:蓝色(Blue)
  3:黑色(Black)
  4:灰色(Grey)
  5:橙色(Orange)
  6:红色(Red)
  7:透明色 (Transparent)
  8:白色(White)
  9:黄色(Yellow)
  Y:多种颜色 (Mixed Color)
- 客户需求 (Customer Request)

产品为02P/03P拼接，L为拼接产品总长，P为PIN距，N为位数(有效位数为02P～XXP)，P=7.50

N	02P	03P	04P	05P	06P	07P	08P	09P	10P	11P	12P	13P
L	15.00	22.50	30.00	37.50	45.00	52.50	60.00	67.50	75.00	82.50	90.00	97.50
B	7.50	15.00	22.50	30.00	37.50	45.00	52.50	60.00	67.50	75.00	82.50	90.00
N	14P	15P	16P	17P	18P	19P	20P	21P	22P	23P	24P	···
L	105.00	112.50	120.00	127.50	135.00	142.50	150.00	157.50	165.00	172.50	180.00	
B	97.50	105.00	112.50	120.00	127.50	135.00	142.50	150.00	157.50	165.00	172.50	

Ant Electronic CO.,LTD

型号(Type): GS017R-7.5-XXP-1Y-00A(H)

核准(Approval):	图号(Drawing NO.):	
审核(Audit):	单位(Units):mm	页码(Page): 1/1
设计(Design):	比例(Scale):FULL	

公差范围(Tolerance Range)		
150～		±1.50
60～150		±1.00
30～60		±0.60
6～30		±0.40
0～6		±0.25
角度 (Angle)	X	±2°
	X.X	±1°

版次(Version): T0