版次 (Vension)	变更内容 (Rev. Content)	变更者 (Change Person)

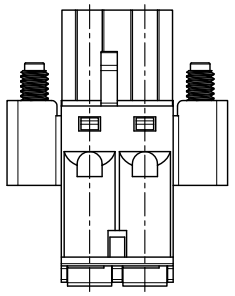

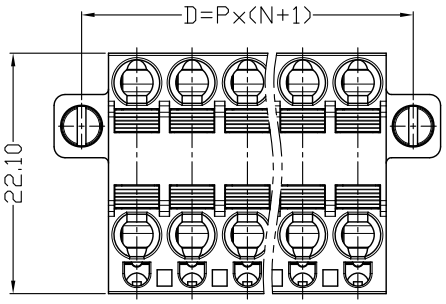

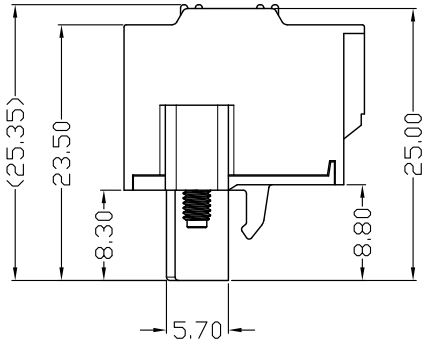

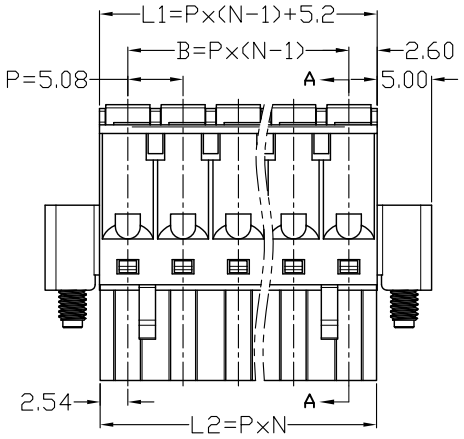

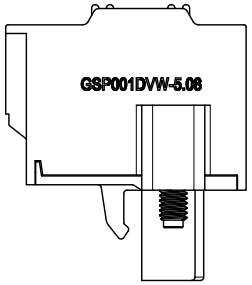

技术参数 (Technical Data)				
UL	应用组别(Use group)	B	C	D
	额定电气参数 (Rated Electrical Parameters)	300V/12A	/	300V/10A
IEC	过压类别(Overvoltage Category) /污染等级(Pollution Degree)	Ⅲ/3	Ⅲ/2	Ⅱ/2
	额定电气参数 (Rated Electrical Parameters)	250V/12A	320V/12A	630V/12A
压线范围(Wire Range)		26～12AWG / 2.5mm²		
工频耐压(Frequency Voltage)		AC 2500V		
冲击耐压(Rated Surge Voltage)		4000V		
绝缘阻抗(Insulation Resistance)		DC500V 500MΩ above		
接触电阻(Contact Resistance)		≤20mΩ		
剥线长度(String Length)		9～10mm		
工作温度(Temperature)		-40℃～+105℃		
额定扭矩(Rated torque)		/		
材质和电镀(Material and plating)				
绝缘材质(Housing)		PA66(UL94 V-0)		
导体材料(Contact)		铜合金，镀镍(Copper alloy, Ni plated)		
弹片(Elastic Sheet)		不锈钢(Stainless Steel)		

产品命名编码:
(Product Number Code):

GSP001DVW-5.08-XXP-1Y-00A(H)

- 产品型号(Series No.)
- 极数(No. of poles)
- 客户需求 (Customer Request)
- 塑体颜色(Housing Color)

1:单倍间距 (Single Pitch)
2:双倍间距 (Double Pitch)

1:绿色(Green)
2:蓝色(Blue)
3:黑色(Black)
4:灰色(Grey)
5:橙色(Orange)
6:红色(Red)
7:透明色 (Transparent)
8:白色(White)
9:黄色(Yellow)
Y:多种颜色 (Mixed Color)

P=5.08mm,N为位数(N for digits),有效位数为(Significant Digits): 02P～24P

N	02P	03P	04P	05P	06P	07P	08P	09P	10P	11P	12P	13P
L1	10.28	15.36	20.44	25.52	30.60	35.68	40.76	45.84	50.92	56.00	61.08	66.16
B	5.08	10.16	15.24	20.32	25.40	30.48	35.56	40.64	45.72	50.80	55.88	60.96
L2	10.16	15.24	20.32	25.40	30.48	35.56	40.64	45.72	50.80	55.88	60.96	66.04
D	15.24	20.32	25.40	30.48	35.56	40.64	45.72	50.80	55.88	60.96	66.04	71.12
N	14P	15P	16P	17P	18P	19P	20P	21P	22P	23P	24P	
L1	71.24	76.32	81.40	86.48	91.56	96.64	101.72	106.80	111.88	116.96	122.04	
B	66.04	71.12	76.20	81.28	86.36	91.44	96.52	101.60	106.68	111.76	116.84	
L2	71.12	76.20	81.28	86.36	91.44	96.52	101.60	106.68	111.76	116.84	121.92	
D	76.20	81.28	86.36	91.44	96.52	101.60	106.68	111.76	116.84	121.92	127.00	

Ant Electronic CO.,LTD

型号(Type): GSP001DVW-5.08-XXP-1Y-00A(H)

核准(Approval):	图号(Drawing NO.):	
审核(Audit):	单位(Units):mm	页码(Page): 1/1
设计(Design):	比例(Scale):FULL	

公差范围(Tolerance Range)		
150～		±1.50
60～150		±1.00
30～60		±0.60
6～30		±0.40
0～6		±0.25
角度 (Angle)	X	±2°
	X.X	±1°

版次(Version): T0