版次 (Vension)	变更内容 (Rev. Content)	变更者 (Change Person)

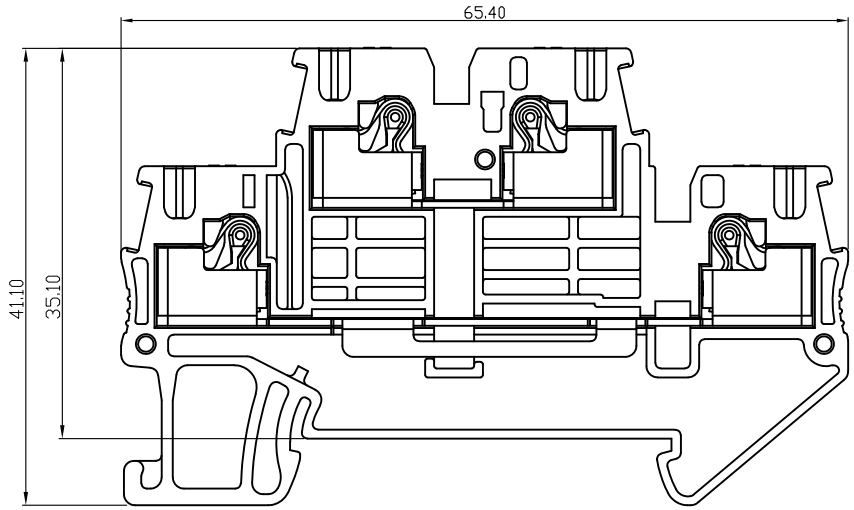

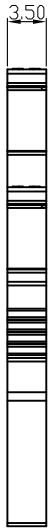

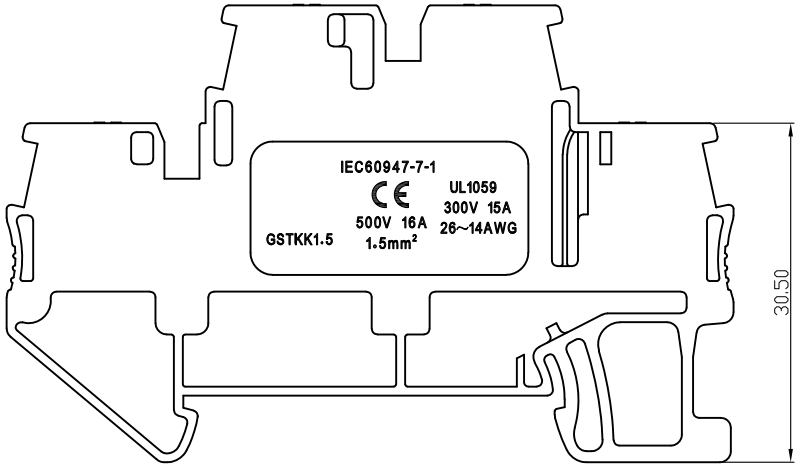

产品命名编码:
(Product Number Code):

GSTKK1.5-01P-1Y-00A(H)

- GSTKK1.5: 产品型号(Series No.)
- 01P: 极数(No. of poles)
- 1Y: 塑体颜色(Housing Color)
- 00A: 客户需求 (Customer Request)

1:单倍间距 (Single Pitch)
2:双倍间距 (Double Pitch)

1:绿色(Green)
2:蓝色(Blue)
3:黑色(Black)
4:灰色(Grey)
5:橙色(Orange)
6:红色(Red)
7:透明色 (Transparent)
8:白色(White)
9:黄色(Yellow)
Y:多种颜色 (Mixed Color)

技术参数 (Technical Data)		
项 目(Item)	UL1059	IEC
额定电气参数 (Rated Electrical Parameters)	300V/15A	500V/16A
压线范围 (Wire Range)	26～14AWG	0.2～1.5mm²
工频耐压 (Frequency Voltage)	AC 2500V	
冲击耐压 (Rated Surge Voltage)	4000V	
绝缘阻抗 (InsUL1059ation Resistance)	DC500V 500MΩ above	
电压降 (Requirement, voltage drop)	≤3.2mV	
剥线长度 (Stripping Length)	10～12mm	
工作温度 (Temperature)	-40℃～+105℃	
材质和电镀(Material and plating)		
绝缘材质(Housing)	PA66(UL94 V-0)	
触点材料(Contact)	铜合金, 镀锡(Copper alloy, Sn plated)	
弹片(Spring)	不锈钢(Stainless)	

Ant Electronic CO.,LTD

型号(Type): GSTKK1.5-01P-1Y-00A(H)

核准(Approval):	图号(Drawing NO.):	
审核(Audit):	单位(Units):mm	页码(Page): 1/1
设计(Design):	比例(Scale):FULL	

公差范围(Tolerance Range)		
150～		±1.50
60～150		±1.00
30～60		±0.60
6～30		±0.40
0～6		±0.25
角度 (Angle)	X	±2°
	X.X	±1°

版次(Version): T0