版次 (Vension)	变更内容 (Rev. Content)	变更者 (Change Person)

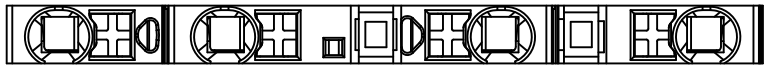

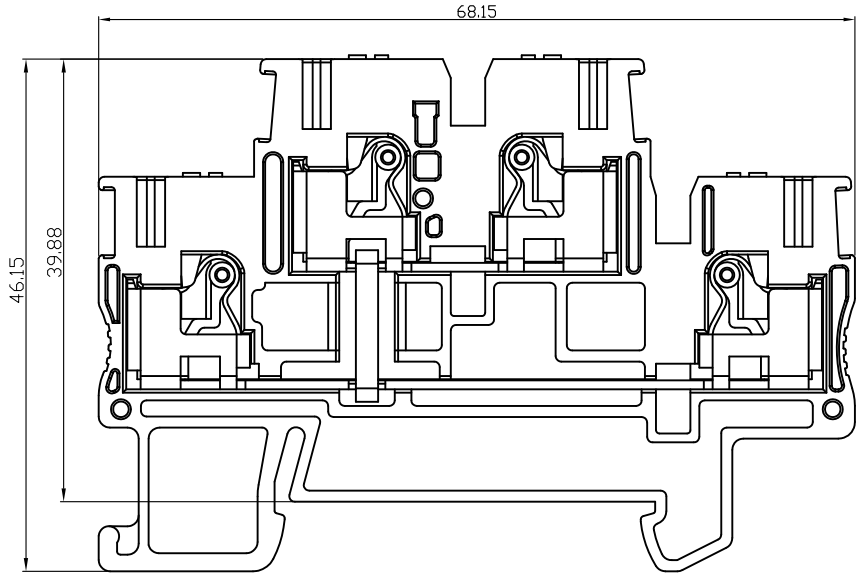

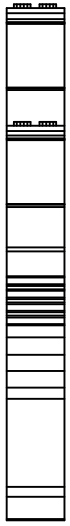

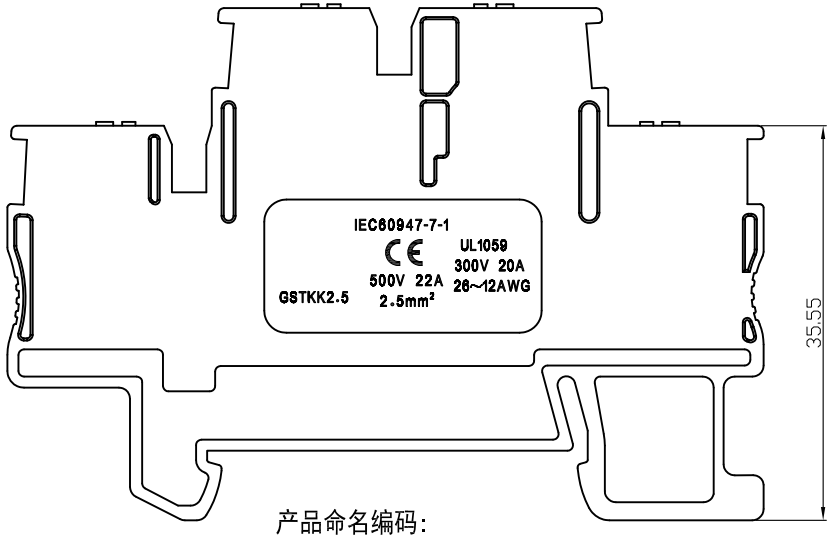

技术参数 (Technical Data)		
项 目(Item)	UL1059	IEC
额定电气参数 (Rated Electrical Parameters)	300V/20A	500V/22A
压线范围 (Wire Range)	26～12AWG	0.2～2.5&4(Sol)mm²
工频耐压 (Frequency Voltage)	AC 3000V	
冲击耐压 (Rated Surge Voltage)	6000V	
绝缘阻抗 (InsUL1059ation Resistance)	DC500V 500MΩabove	
电压降 (Requirement, voltage drop)	≤3.2mV	
剥线长度 (Stripping Length)	10～12mm	
工作温度 (Temperature)	-40℃～+105℃	
材质和电镀(Material and plating)		
绝缘材质(Housing)	PA66(UL94 V-0)	
触点材料(Contact)	铜合金，镀锡(Copper alloy, Sn plated)	
弹片(Spring)	不锈钢(Stainless)	

产品命名编码:
(Product Number Code):

GSTKK2.5-01P-1Y-50A(H)

- GSTKK2.5: 产品型号(Series No.)
- 01: 极数(No.of poles)
- 1: 1:单倍间距 (Single Pitch) / 2:双倍间距 (Double Pitch)
- Y: 塑体颜色(Housing Color)
- 50A: 客户需求 (Customer Request)

1:绿色(Green)	7:透明色 (Transparent)
2:蓝色(Blue)	8:白色(White)
3:黑色(Black)	9:黄色(Yellow)
4:灰色(Grey)	Y:多种颜色 (Mixed Color)
5:橙色(Orange)	
6:红色(Red)	

Ant Electronic CO.,LTD

型号(Type): GSTKK2.5-01P-1Y-50A(H)

核准(Approval):	图号(Drawing NO.):	
审核(Audit):	单位(Units):mm	页码(Page): 1/1
设计(Design):	比例(Scale):FULL	

公差范围(Tolerance Range)		
150～		±1.50
60～150		±1.00
30～60		±0.60
6～30		±0.40
0～6		±0.25
角度 (Angle)	X	±2°
	X.X	±1°

版次(Version): T0