版次 (Vension)	变更内容 (Rev. Content)	变更者 (Change Person)

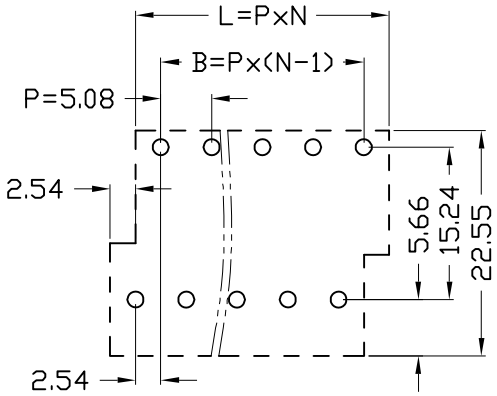

PCB LAYOUT

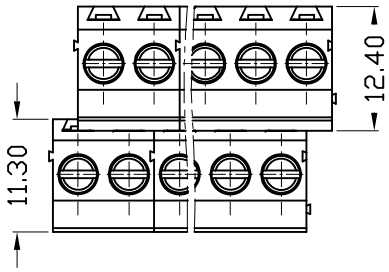

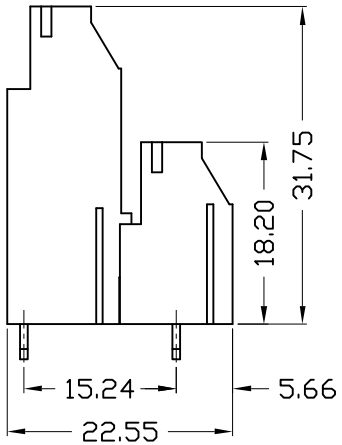

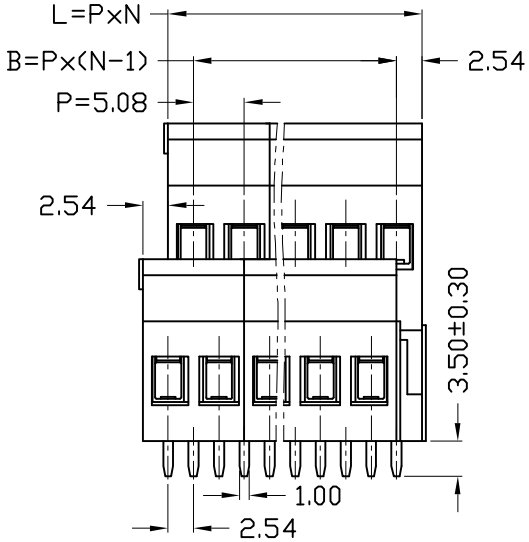

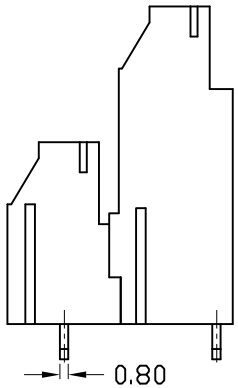

技术参数 (Technical Data)		
项 目(Item)	UL	IEC
额定电气参数 (Rated Electrical Parameters)	300V/20A	250V/20A
压线范围 (Wire Range)	26～12AWG	0.5～2.5mm²
工频耐压 (Frequency Voltage)	AC 2000V	
冲击耐压 (Rated Surge Voltage)	4000V	
绝缘阻抗 (Insulation Resistance)	DC500V 500MΩ above	
接触电阻 (Contact Resistance)	≤20mΩ	
剥线长度 (Strpping Length)	7mm	
工作温度 (Temperature)	-40℃～+105℃	
材质和电镀(Material and plating)		
绝缘材质(Housing)	PA66(UL94 V-0)	
触点材料(Contact)	铜合金，镀锡(Copper alloy, Sn plated)	
螺丝(Screws)	钢，镀锌(Steel, Zn plated)	
方盒(Cage)	铜合金，镀镍(Copper alloy, Ni plated)	

产品命名编码:
(Product Number Code):

GS028A-5.08-2*XXP-1Y-00A(H)

- 产品型号(Series No.)
- 极数(No.of poles)
- 塑体颜色(Housing Color)
- 客户需求 (Customer Request)

1:单倍间距 (Single Pitch)
2:双倍间距 (Double Pitch)

1:绿色(Green)
2:蓝色(Blue)
3:黑色(Black)
4:灰色(Grey)
5:橙色(Orange)
6:红色(Red)
7:透明色 (Transparent)
8:白色(White)
9:黄色(Yellow)
Y:多种颜色 (Mixed Color)

P=5.08mm,N为孔位数(N for hole digits),有效位数为(Significant Digits): 2*02P～2*XXP

N	02P	03P	04P	05P	06P	07P	08P	09P	10P	11P	12P	13P
L	10.16	15.24	20.32	25.40	30.48	35.56	40.64	45.72	50.80	55.88	60.96	66.04
B	5.08	10.16	15.24	20.32	25.40	30.48	35.56	40.64	45.72	50.80	55.88	60.96
N	14P	15P	16P	17P	18P	19P	20P	21P	22P	23P	24P	...
L	71.12	76.20	81.28	86.36	91.44	96.52	101.60	106.68	111.76	116.84	121.92	
B	66.04	71.12	76.20	81.28	86.36	91.44	96.52	101.60	106.68	111.76	116.84	

Ant Electronic CO.,LTD

型号(Type): GS028A-5.08-2*XXP-1Y-00A(H)

核准(Approval):	图号(Drawing NO.):	
审核(Audit):	单位(Units):mm	页码(Page): 1/1
设计(Design):	比例(Scale):FULL	

公差范围(Tolerance Range)		
150～		±1.50
60～150		±1.00
30～60		±0.60
6～30		±0.40
0～6		±0.25
角度 (Angle)	X	±2°
	X.X	±1°

版次(Version): T0